Homework (lecture 8):

1, 5, 10, 12, 19, 24, 26, 31, 37, 43, 47

1. During the 4.0 min a 5.0 A current is set up in a wire, how many (a) coulombs and (b) electrons pass through any cross section across the wire's width?

(a) We have:

$$q = it = 5 \times 4 \times 60 = 1200(C)$$

(b) The number of electrons:

$$N = \frac{q}{e} = \frac{1200}{1.6 \times 10^{-19}} = 7.5 \times 10^{21}$$

5. A beam contains 2.0×10^8 doubly charged positive ions per cubic centimeter, all of which are moving north with a speed of 1.0×10^5 m/s. What are the (a) magnitude and (b) direction of the current density J (c) What additional quantity do you need to calculate the total current i in this ion beam?

(a) The current density is computed by:

$$J = nqv_d$$

v_d: the drift velocity of ions, in this problem: $v_d = 10^5 (m/s)$

Ions are doubly charged, so: $q = 2e$

$$J = 2\times10^{14}(1/m^3)\times2\times1.6\times10^{-19}(C)\times10^5(m/s) = 6.4(A/m^2)$$

(b) the current direction is the same as the direction motion of ions, to the north

(c) We need the cross-sectional area of the beam: $i = J.A$

10. The magnitude J of the current density in a certain wire with a circular cross section of radius R = 2.50 mm is given by $J = (3.00 \times 10^8)r^2 = Cr^2$, with J in amperes per square meter and radial distance r in meters. What is the current through the outer section bounded by r = 0.900R and r = R?

In this case, the current depends on the distance r, so the current di through a cross section dA from r to r+dr:

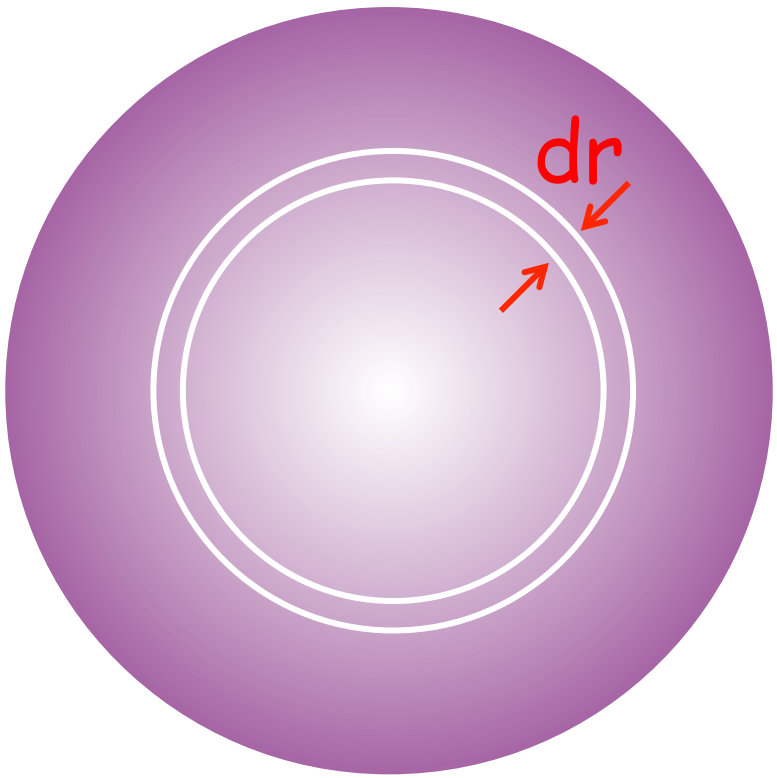

$$di = JdA = Cr^2 \times 2\pi r dr$$

$$i = \int_{r_1}^{r_2} di = 2\pi C \int_{r_1}^{r_2} r^3 dr$$

$$i = \frac{\pi C}{2}\left(r_2^4 - r_1^4\right)$$

12. Near Earth, the density of protons in the solar wind (a stream of particles from the Sun) is 8.70 cm^{-3}, and their speed is 470 km/s. (a) Find the current density of these protons. (b) If Earth's magnetic field did not deflect the protons, what total current would Earth receive?

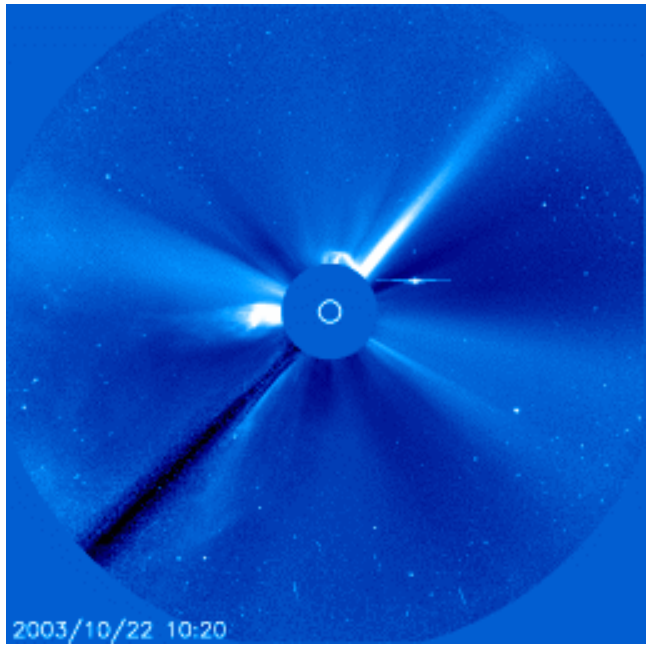

(a)We have: $$J = nqv_d$$

$$J = 8.7\times10^{6}\times1.6\times10^{-19}\times470\times10^{3}$$

$$= 6.54\times10^{-7}(A/m^2)$$

(b)The current i: $$i = JA$$

A is Earth's cross-sectional area that the beam of protons encounters

$$i = \pi R_E^2 J = 3.14\times(6.37\times10^{6})^2\times6.54\times10^{-7} = 8.33\times10^{7}(A)$$

Solar Wind and Earth

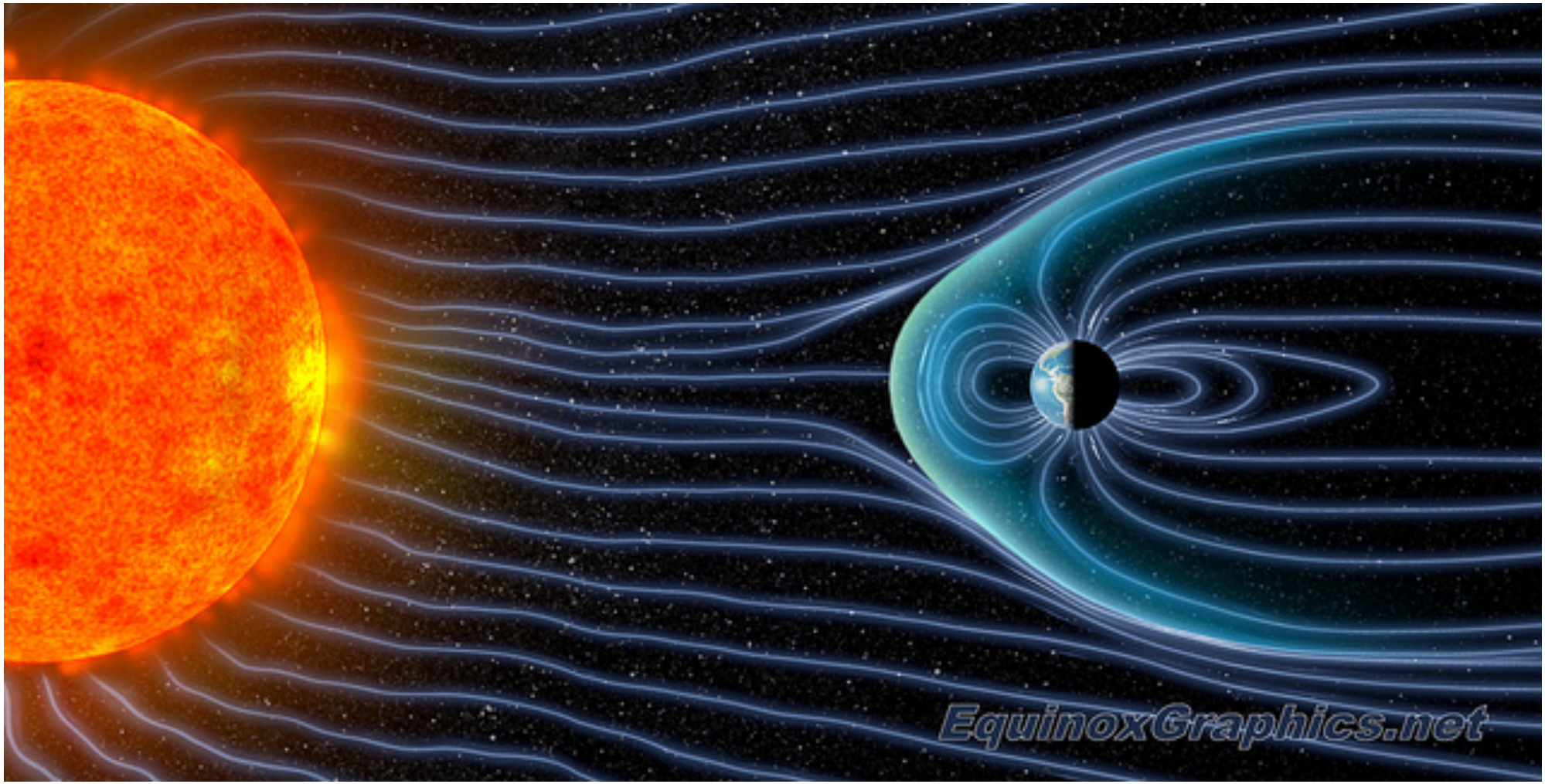

19. A conducting wire has a 1 mm diameter, a 2 m length, and a 50 mΩ resistance. What is the resistivity of the material?

The resistance of a conducting wire is calculated by:

$$R = \rho \frac{l}{A}$$

$$\rho = \frac{RA}{l} = \frac{50 \times 10^{-3} \times 3.14 \times (0.5 \times 10^{-3})^2}{2} = 1.96 \times 10^{-8} (\Omega m)$$

24. Figure a gives the magnitude E(x) of the electric fields that have been set up by a battery along a resistive rod of length 9.00 mm (Fig. b). The rod consists of three sections of the same material but with different radii. (The schematic diagram of Fig. b does not indicate the different radii.) The radius of section 3 is 2.00 mm. What is the radius of (a) section 1 and (b) section 2?

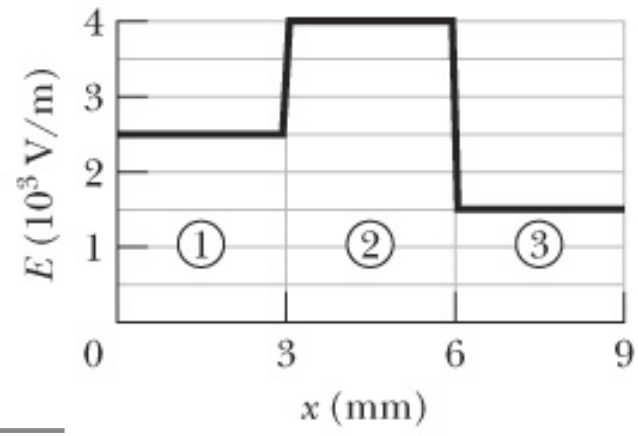

(a)

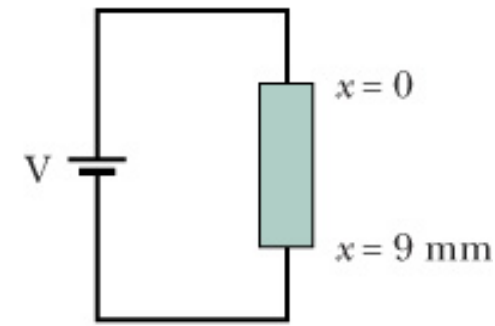

(b)

(a)

$$\rho = \frac{E}{J}$$

$$E = \rho J = \rho \frac{i}{A} = \rho \frac{i}{\pi r^2}$$

$$\frac{E_1}{E_3} = \frac{r_3^2}{r_1^2} \Rightarrow r_1 = r_3 \sqrt{\frac{E_3}{E_1}} = 1.55(mm)$$

(b)

$$r_2 = 1.23(mm)$$

26. In Fig. a, a 9.00 V battery is connected to a resistive strip that consists of three sections with the same cross-sectional areas but different conductivities. Figure b gives the electric potential V(x) versus position x along the strip. Section 3 has conductivity $3.00 \times 10^7\ (\Omega.m)^{-1}$. What is the conductivity of section (a) 1 and (b) 2?

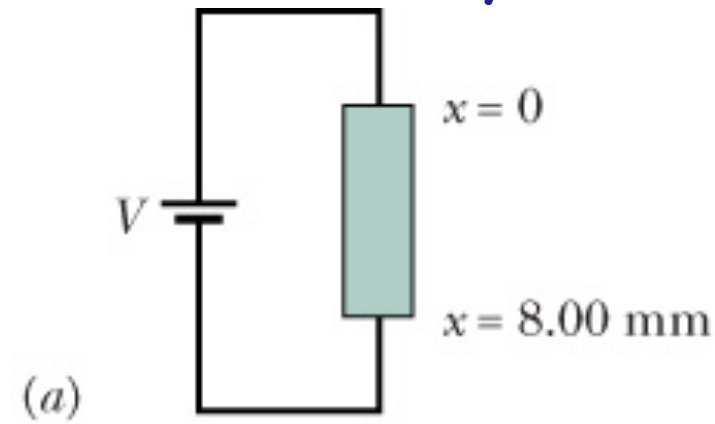

Potential difference: $V = iR = i\rho\frac{l}{A} = \frac{il}{\sigma A}$

$$\frac{V_3}{V_1} = \frac{l_3\sigma_1}{l_1\sigma_3}$$

$$\Rightarrow \sigma_1 = \frac{V_3}{V_1}\frac{l_1}{l_3}\sigma_3 = \frac{3-0}{9-7}\frac{4}{3}3\times10^7$$

$$\sigma_1 = 6\times10^7(\Omega m)^{-1}$$

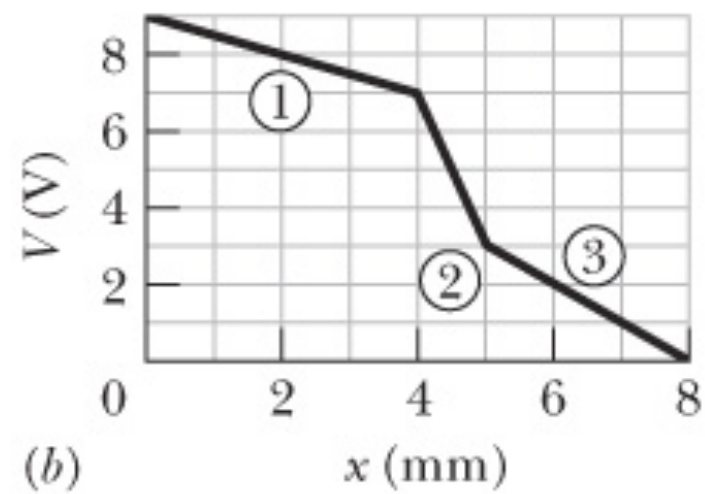

$$\Rightarrow \sigma_2 = \frac{V_3}{V_2}\frac{l_2}{l_3}\sigma_3 = \frac{3-0}{7-3}\frac{1}{3}3\times 10^7$$

$$\sigma_2 = 0.75\times 10^7 (\Omega m)^{-1}$$

31. An electrical cable consists of 125 strands of fine wire, each having 2.65 μΩ resistance. The same potential difference is applied between the ends of all the strands and results in a total current of 0.750 A. (a) What is the current in each strand? (b) What is the applied potential difference? (c) What is the resistance of the cable?

(a)The current in each strand:

$$i = \frac{I}{125} = \frac{0.75}{125} = 0.006(A) = 6(mA)$$

(b) The applied potential difference:

$$V = ir = 0.006 \times 2.65 \times 10^{-6}$$

$$= 15.9 \times 10^{-9}(V)$$

(c) The equivalent resistance:

$$R = \frac{r}{125} = 2.12 \times 10^{-8}(\Omega)$$

37. Show that, according to the free-electron model of electrical conduction in metals and classical physics, the resistivity of metals should be proportional to $\sqrt{T}$, where T is the temperature in kelvins. (see Eq. 19-31.)

- In the free electron model, we assume that the conduction electrons in the metal are free to move throughout the volume of a sample and they collide not with one another but only with atoms of the metal, this is like the molecules of a gas
- In a conductor, the electrons move randomly with an effective speed $v_{eff} \approx 10^6$ m/s. If we apply an electric field, the electrons modify their random motions slightly and drift very slowly in the opposite direction to the field with a velocity $v_d \approx 10^{-7}$ m/s, so $v_d \approx 10^{-13}\ v_{eff}$

$$\rho = \frac{m}{e^2 n\tau}; veff = \sqrt{\frac{8RT}{\pi M}}$$

So,

$$\rho \propto \frac{1}{\tau} \propto v_{e_{ff}} \propto \sqrt{T}$$

43. An unknown resistor is connected between the terminals of a 3.00 V battery. Energy is dissipated in the resistor at the rate of 0.540 W. The same resistor is then connected between the terminals of a 1.50 V battery. At what rate is energy now dissipated?

The power of the resistor: $P = i^2 R$ or $P = \frac{V^2}{R}$

$$P_1 = \frac{V_1^2}{R}; P_2 = \frac{V_2^2}{R}$$

$$P_2 = \left(\frac{V_2}{V_1}\right)^2 P_1 = \left(\frac{1.5}{3.0}\right)^2 0.54 = 0.135(W)$$

47. A heating element is made by maintaining a potential difference of 75 .0 V across the length of a Nichrome wire that has a 2.60×10^{-6} m^2 cross section. Nichrome has a resistivity of 5.00×10^{-7} Ω.m. (a) If the element dissipates 5000 W, what is its length? (b) If 100 V is used to obtain the same dissipation rate, what should the length be?

$$P = \frac{V^2}{R} = \frac{V^2}{\rho \frac{l}{A}} = \frac{V^2 A}{\rho l}$$

$$\Rightarrow l = \frac{V^2 A}{\rho P}$$

(a)

$$l = \frac{75^2 \times 2.6 \times 10^{-6}}{5 \times 10^{-7} \times 5000} = 5.85(m)$$

(b)

$$l' = \left(\frac{V'}{V}\right)^2 l = \left(\frac{100}{75}\right)^2 \times 5.85 = 10.4(m)$$

Homework (lecture 9):

2, 5, 7, 10, 17, 22, 24, 30, 34, 44, 45, 54, 57, 60, 65

2. In the figure below, the ideal batteries have emfs ε_1 = 200 V and ε_2 = 50 V and the resistances R_1 = 3.0 Ω and R_2 = 2.0 Ω. If the potential at P is defined to be 100 V, what is the potential at Q?

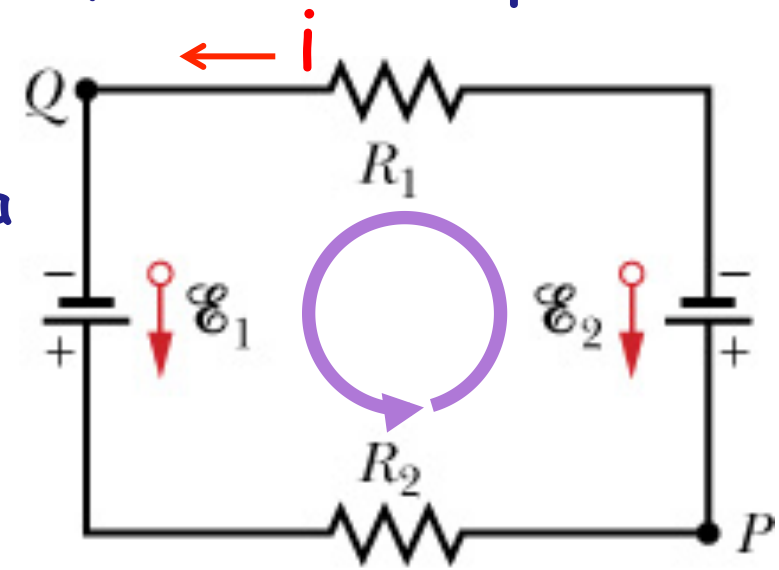

Assuming the current direction is counterclockwise, using the loop rule in a counterclockwise direction, starting from point Q:

$$\varepsilon_1 - iR_2 - \varepsilon_2 - iR_1 = 0$$

$$\Rightarrow i = \frac{\varepsilon_1 - \varepsilon_2}{R_1 + R_2} = \frac{200 - 50}{3 + 2} = 30(A)$$

i = 30 A > 0, so the current is counterclockwise as assumed

Start at point Q, follow the counterclockwise direction:

$$V_Q + \varepsilon_1 - iR_2 = V_P \Rightarrow V_Q = V_P - \varepsilon_1 + iR_2$$

$$V_Q = 100 - 200 + 30 \times 2 = -40(V)$$

5. A 5.0 A current is set up in a circuit for 6.0 min by a rechargeable battery with a 6.0 V emf. By how much is the chemical energy of the battery reduced?

The emf of the battery: $$\varepsilon = \frac{dW}{dq}$$

For 6 min:

$$W = \varepsilon \Delta q = \varepsilon i \Delta t = (6V) \times (5A) \times (6 \times 60s) = 10800(J)$$

7. A wire of resistance 5.0 Ω is connected to a battery whose emf ε is 2.0 V and whose internal resistance is 1.0 Ω. In 2.0 min, how much energy is (a) transferred from chemical form in the battery, (b) dissipated as thermal energy in the wire, and (c) dissipated as thermal energy in the battery?

the current i: $$i = \frac{\varepsilon}{r+R} = \frac{2}{1+5} = 1.33(A)$$

(a)in the battery:

$$W_\varepsilon = Pt = i\varepsilon t = \frac{1}{3} \times 2 \times (2.0 \times 60) = 80(J)$$

(b)in the wire:

$$W_R = Pt = i^2 Rt = \left(\frac{1}{3}\right)^2 \times 5 \times 2.0 \times 60 = 66.7(J)$$

(c)as thermal energy in the battery due to the internal resistance:

$$W_r = W_\varepsilon - W_R = 13.3(J)$$

10. (a) In the figure below, what value must R have if the current in the circuit is to be 1.5 mA? Take ε_1 = 2.0 V, ε_2 = 3.0 V, and r_1 = r_2 = 3 Ω. (b) What is the rate at which thermal energy appears in R?

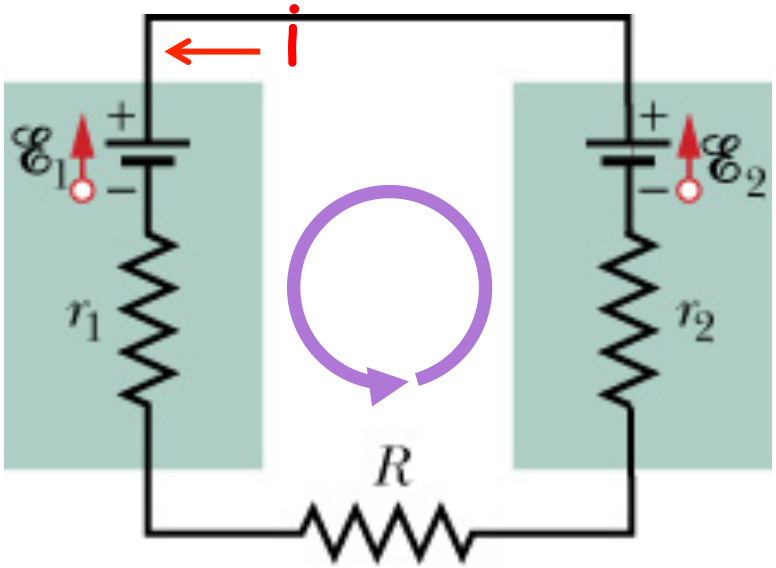

(a) Assuming the direction of current is counterclockwise and using the loop rule in the counterclockwise direction:

$$-\varepsilon_1 - ir_1 - iR - ir_2 + \varepsilon_2 = 0$$

$$R = \frac{\varepsilon_2 - \varepsilon_1 - i(r_1 + r_2)}{i}$$

$$R \approx 661(\Omega)$$

(b) The rate of thermal energy in R:

$$P = i^2 R = 2.25 \times 10^{-6} \times 661 \approx 1.5 \times 10^{-3} (W)$$

17. In the figure below, battery 1 has emf ε_1 = 12 V and internal resistance r_1 = 0.016 Ω and battery 2 has emf ε_2 = 12 V and internal resistance r_2 = 0.012 Ω. The batteries are connected in series with an external resistance R. (a) What R value makes the terminal-to-terminal potential difference of one of the batteries zero? (b) Which battery is that?

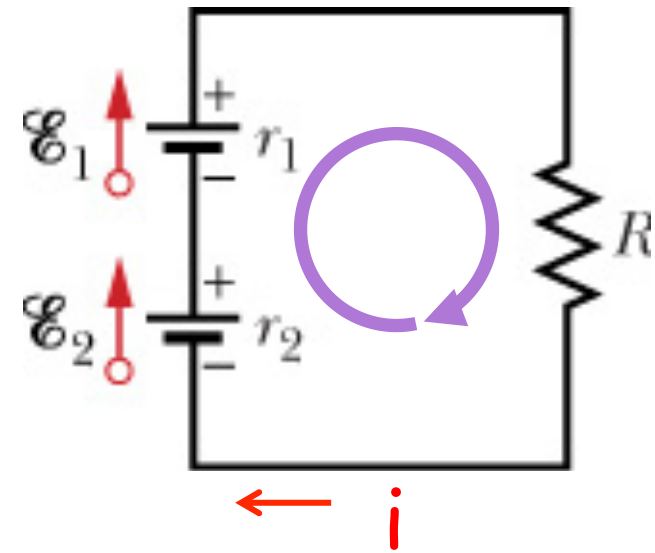

The direction of current in this circuit is clockwise, using the loop rule in the clockwise direction:

$$\varepsilon_2 - ir_2 + \varepsilon_1 - ir_1 - iR = 0 \quad (1)$$

If the terminal-to-terminal potential difference of one battery is zero, so we have:

$$\varepsilon_X - ir_X = 0 \quad (2)$$

$$(1)\,\&\,(2) \Rightarrow \varepsilon_Y - ir_Y = iR \Rightarrow R = \frac{\varepsilon_Y}{i} - r_Y$$

X can be 1 or 2, so Y can be 2 or 1 accordingly

So,

$$R = \frac{\varepsilon_Y}{\varepsilon_X} r_X - r_Y = r_X - r_Y$$

R must be positive, so X is battery 1 and Y is battery 2

$$R = r_1 - r_2 = 0.016 - 0.012 = 0.004(\Omega)$$

(b) that is battery 1

22. The figure below shows five 8.00 Ω resistors. Find the equivalent resistance between points (a) F and H and (b) F and G. (Hint: For each pair of points, imagine that a battery is connected across the pair.)

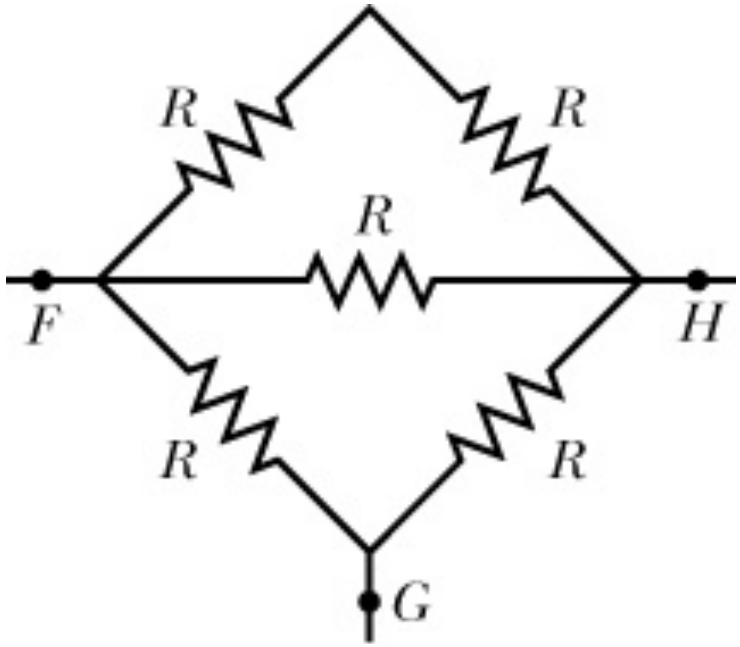

(a) The equivalent resistance between F & H, so we have:

(R+R) // R // (R+R)

$$\frac{1}{R_{eq}} = \frac{1}{2R} + \frac{1}{R} + \frac{1}{2R} = \frac{2}{R}$$

$$R_{eq} = \frac{R}{2} = 4.0(\Omega)$$

(b) The equivalent resistance between F & G, so we have: {[(R+R) // R] + R} // R + (R+R) // R:

$$R_{eq1} = \frac{2RR}{3R} = \frac{2}{3}R$$

+ [(R+R) // R] + R:

$$R_{eq2} = \frac{2}{3}R + R = \frac{5}{3}R$$

So the equivalent resistance for {[(R+R) // R] + R} // R:

$$R_{eq} = \frac{R_{eq2}R}{R_{eq2} + R} = \frac{\frac{5}{3}RR}{\frac{5}{3}R + R} = 0.625R$$

$$R_{eq} = 0.625 \times 8 = 5(\Omega)$$

24. In the figure below, $R_1 = R_2 = 4.0\ \Omega$ and $R_3 = 1.5\ \Omega$. Find the equivalent resistance between points D and E. (Hint: Imagine that a battery is connected across those points.)

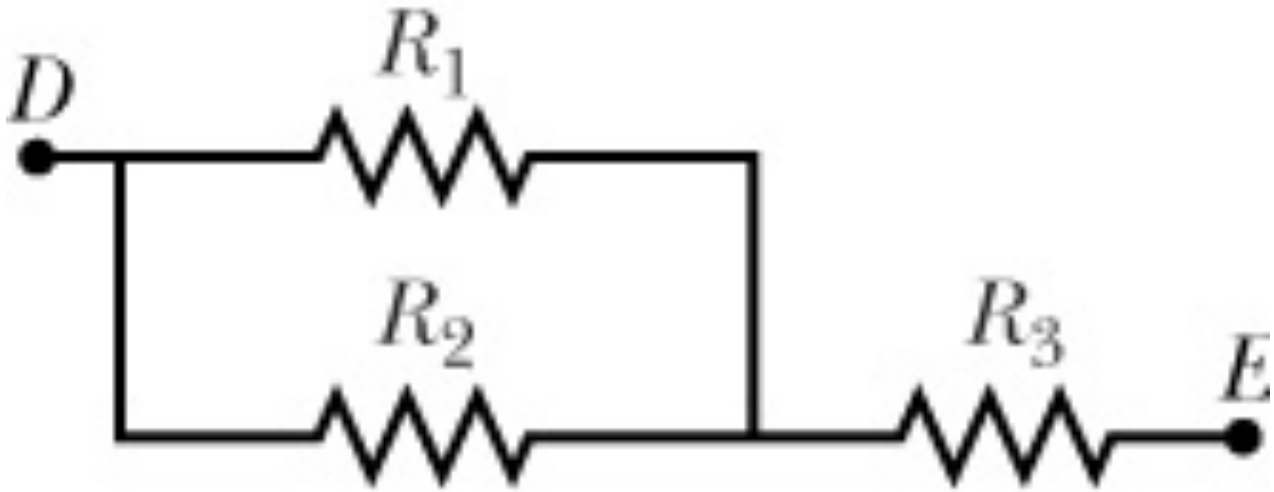

R_1 is in parallel with R_2, so:

$$R_{12} = \frac{R_1 R_2}{R_1 + R_2} = \frac{4.0\Omega}{2} = 2(\Omega)$$

R_{12} in series with R_3:

$$R_{123} = R_{12} + R_3 = 3.5(\Omega)$$

34. The resistances in Figs. a and b are all 4.0 Ω, and the batteries are ideal 12 V batteries. (a) When switch S in Fig. a is closed, what is the change in the electric potential V_1 across resistor 1, or does V_1 remain the same? (b) When switch S in Fig. b is closed, what is the change in V_1 across resistor 1, or does V_1 remain the same?

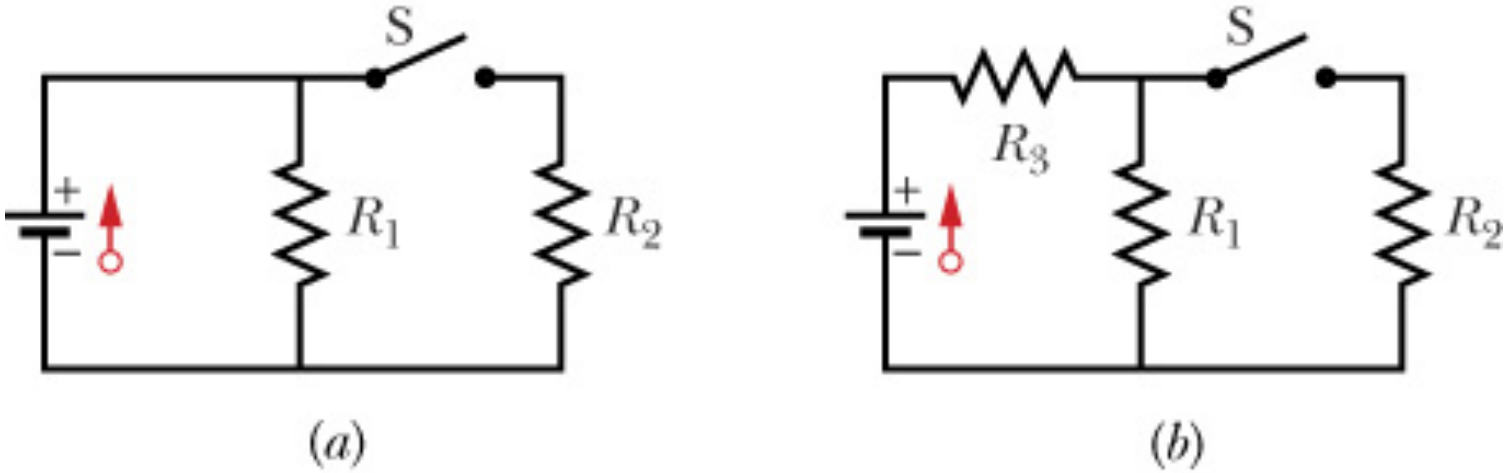

(a) the battery is ideal, it has no internal resistance, therefore

$V_1 = \varepsilon = 12$ V = constant, remains the same

(b) before closing:

$$V_1 = \frac{\varepsilon}{R_1 + R_3} R_1 = \frac{12}{8} 4 = 6(V)$$

after:

$$V'_1 = \frac{\varepsilon}{R_{12} + R_3} R_{12} = \frac{12}{2+4} 2 = 4(V)$$

$$\Delta V = -2(V)$$

44. In the figure below, R_1 = 100 Ω, R_2 = R_3 = 50.0 Ω, R_4 = 75.0 Ω, and the ideal battery has emf ε = 12.00 V. (a) What is the equivalent resistance? What is i in (b) resistance 1, (c) resistance 2, (d) resistance 3, and (e) resistance 4?

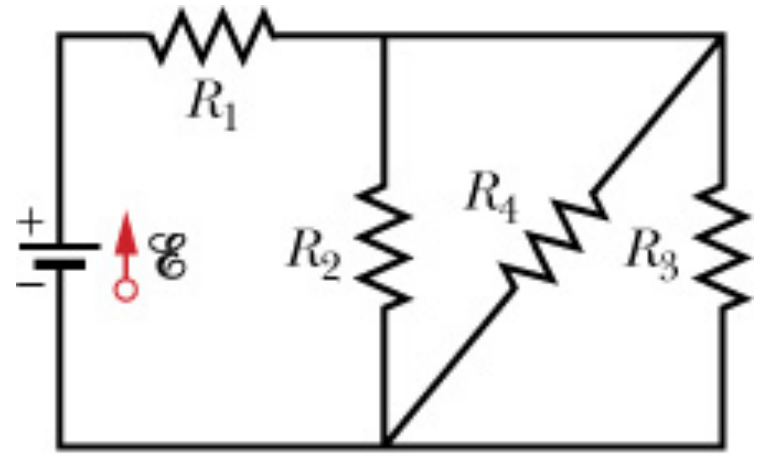

(a) We have R1 + (R2 // R3 // R4):

$$R_{eq} = R_1 + \frac{R_{23}R_4}{R_{23}+R_4} = 100 + \frac{25\times 75}{25+75}$$

$$= 118.75 \approx 118.8(\Omega)$$

(b) the current i in R_1:

$$i = \frac{\varepsilon}{R_{eq}} = \frac{12}{118.8} = 0.101(A) \text{ or } 101(mA)$$

For (c), (d), and (e), we should calculate the potential difference applied to R_2, R_3, and R_4, then calculate the currents

45. The resistances are $R_1 = 1.0\Omega$ and $R_2 = 2.0\Omega$, and the ideal batteries have emfs $\varepsilon_1 = 2.0V$ and $\varepsilon_2 = \varepsilon_3 = 4.0V$. What are the sizes and directions (up or down) of the currents in batteries 1, 2, and 3 and $V_a - V_b$

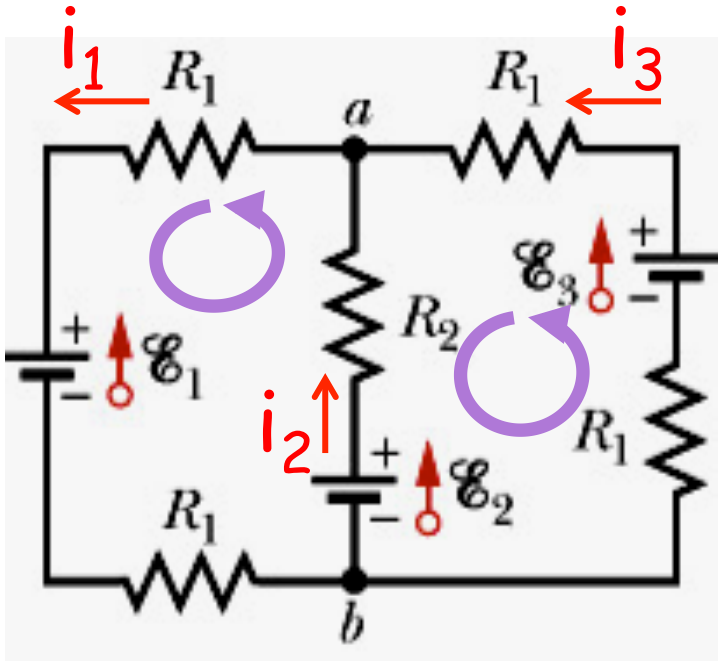

+Loop $a\varepsilon_1 ba$:

$$-i_1R_1 - \varepsilon_1 - i_1R_1 + \varepsilon_2 - i_2R_2 = 0$$

$$i_1 + i_2 = 1 \quad (1)$$

+Loop $b\varepsilon_3 a\varepsilon_2 b$:

$$-i_3R_1 + \varepsilon_3 - i_3R_1 + i_2R_2 - \varepsilon_2 = 0$$

$$i_2 = i_3 \quad (2)$$

+Junction a: $i_2 + i_3 = i_1 \quad (3)$

$$(1),(2)\,\&\,(3): i_1 = \frac{2}{3}(\mathrm{A}); i_2 = i_3 = \frac{1}{3}(\mathrm{A})$$

+ $V_a - V_b$:

$$V_b + \varepsilon_2 - i_2R_2 = V_a$$

$$V_a - V_b = 3.33\,(\mathrm{V})$$

54. When the lights of a car are switched on, an ammeter in series with them reads 10.0 A and a voltmeter connected across them reads 12.0 V (see Figure). When the electric starting motor is turned on, the ammeter reading drops to 8.5 A and the lights dim somewhat. If the internal resistance of the battery is 0.05 Ω and that of the ammeter is negligible, what are (a) the emf of the battery and (b) the current through the starting motor when the lights are on?

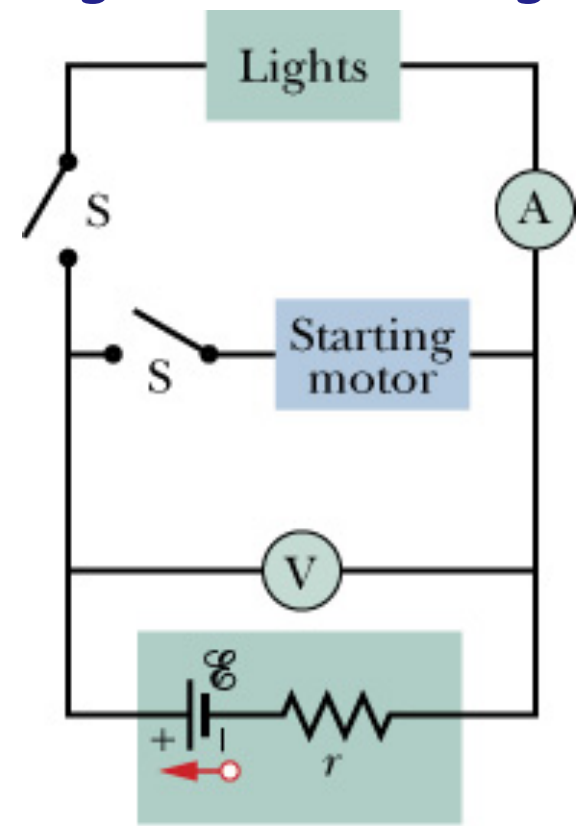

(a) $V = \varepsilon - ir \Rightarrow \varepsilon = V + ir$

$$\varepsilon = 12 + 10 \times 0.05 = 12.5(V)$$

$$R_{\text{lights}} = \frac{V}{i} = \frac{12}{10} = 1.2(\Omega)$$

(b) both S are closed:

$$V' = i_A R_{\text{lights}} = 8.5 \times 1.2 = 10.2(V)$$

So, the main current:

$$i' = \frac{\varepsilon - V'}{r} = \frac{12.5 - 10.2}{0.05} = 46(A)$$

the current through the starting motor:

$$i_{\text{motor}} = 46 - 8.5 = 37.5(A)$$

57. Switch S in the figure below is closed at time t = 0, to begin charging an initially uncharged capacitor of capacitance C = 15.0 μF through a resistor of resistance R = 20.0 Ω. At what time is the potential across the capacitor equal to that across the resistor?

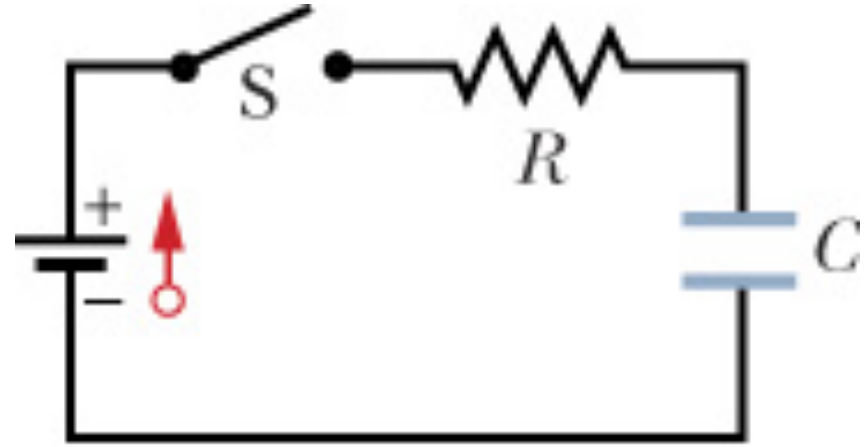

For a charging process, the potential difference across the capacitor:

$$V_C = \frac{q}{C} = \varepsilon(1 - e^{-t/RC}) \quad (1)$$

The current: $i = \frac{dq}{dt} = \left(\frac{\varepsilon}{R}\right)e^{-t/RC}$

So, the potential difference across resistor R:

$$V_R = iR = \varepsilon e^{-t/RC} \quad (2)$$

Putting (1) = (2):

$$1 - e^{-t/RC} = e^{-t/RC}$$

$$t = -RC\ln\frac{1}{2} = -(20\times15\times10^{-6})\ln\frac{1}{2} = 0.21\times10^{-3}(s) \text{ or } 0.21(ms)$$

60. A capacitor with initial charge q_0 is discharged through a resistor. What multiple of the time constant τ gives the time the capacitor takes to lose (a) the first one-third of its charge and (b) two-thirds of its charge?

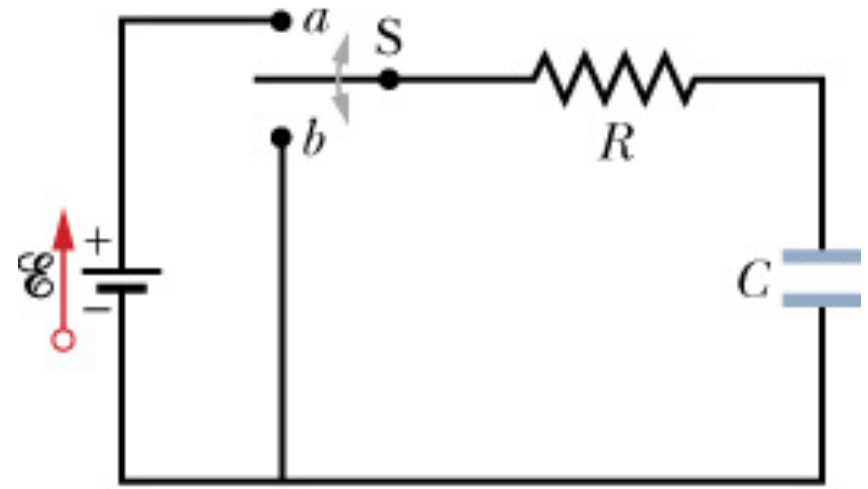

(a) For the discharging process, the charge on C decreases:

$$q = q_0 e^{-t/RC} = q_0 e^{-t/\tau}$$

loosing 1/3 gives 2/3 for the remaining

$$e^{-t/\tau} = \frac{q}{q_0} = \frac{2}{3} \Rightarrow t = -\tau \ln \frac{2}{3} \approx 0.41\tau$$

(b) loosing 2/3 gives 1/3 for the remaining

$$e^{-t/\tau} = \frac{q}{q_0} = \frac{1}{3} \Rightarrow t = -\tau \ln \frac{1}{3} \approx 1.1\tau$$

65. In the figure below, R_1 = 10 k Ω, R_2 = 15 kΩ, C = 0.4 μF, and the ideal battery has emf ε = 20 V. First, the switch is closed a long time so that the steady state is reached. Then the switch is opened at time t = 0. What is the current in resistor 2 at t = 4.0 ms?

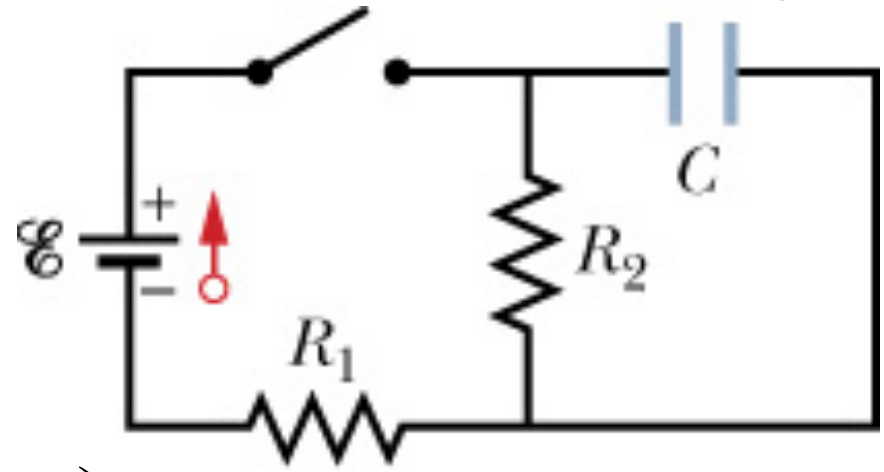

When the switch is closed, capacitor C is charged. Then it is opened, the capacitor is discharged through resistor R_2, the current is given by:

$$i = -\left(\frac{V_0}{R_2}\right)e^{-t/R_2C}; \tau = R_2C = 6(ms)$$

So, we need to determine V_0, which is the potential difference across R_2 when the switch is closed:

$$V_0 = \frac{\varepsilon}{R_1 + R_2}R_2 = \frac{20}{10+15}15 = 12(V)$$

$$i = -\frac{12}{15\times10^3}e^{-4/6} = -0.41\times10^{-3}(A) \text{ or } -0.41(mA)$$